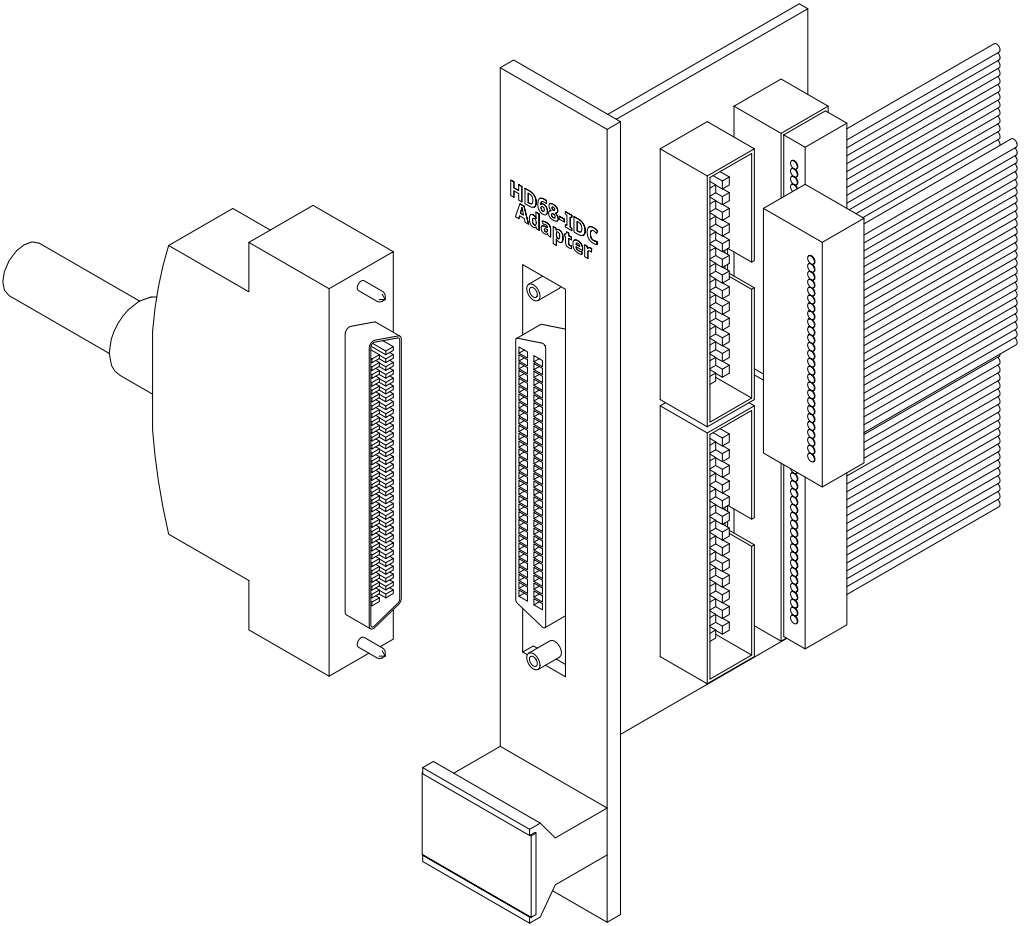
HD68-IDC
Adapter